DOCK EDGE 4E INC.® MODULAR DOCK 2 GO

6’ x 12’ Floating, Main Dock Construction Guide and Bill Of Materials

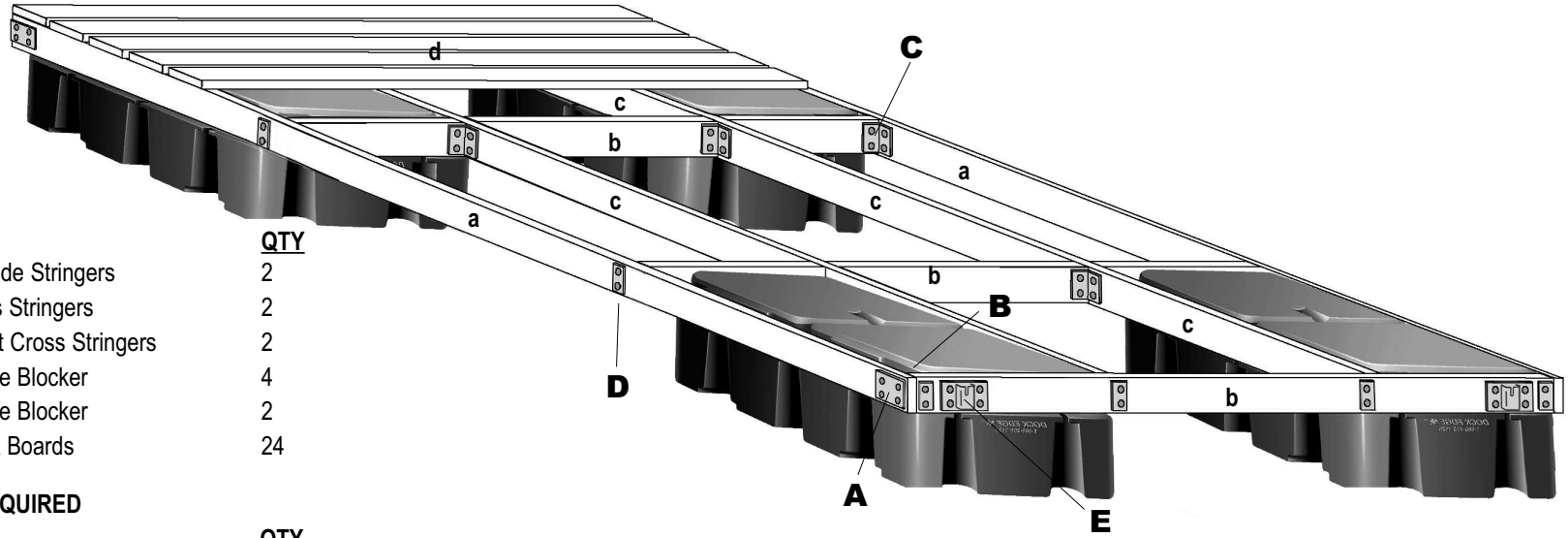

LUMBER REQUIRED

REF	Description	QTY
a	2” x 6” x 12’ Outside Stringers	2
b	2” x 6” x 69” Ends Stringers	2
c	2” x 6” x 141” Short Cross Stringers	2
d	2” x 6” x 21” Inside Blocker	4
e	2” x 6” x 24” Inside Blocker	2
f	2” x 6” x 6’ Deck Boards	24

ADDITIONAL HARDWARE REQUIRED

Description	QTY
1/2” x 2 1/2” Carriage Bolts and nuts & lock washers	92 each
3/8” x 2” Lag Bolts & Washers	40 ea.
Chain (zinc coated) length to suit anchorage method and depth	

ANCHORAGE: DockEdge+ recommends that the dock be anchored to shore. The furthest extension of the dock should be anchored to appropriate dock anchors at the end of the dock using chain of sufficient size and the chain retainers 99-013-F in this dock kit.

NOTE: If attaching modular sections, anchorage should be maintained at the outer-most end of the dock assembly and additional placement of anchorage at each modular attachment point.

FLOATATION REQUIRED

Note: The Howell 550 has recessed flange areas.

HOWELL™ 550

550lb. / 250 Kg Capacity

QTY: 4

DOCK HARDWARE INCLUDED

REF	Part#	Description	QTY
A	93-122-F	Backer Plate	6
B	92-104-F	Inside Corner	4
C	99-002-F	Joist Corner	16
D	99-006-F	Washer Plate	28
E	99-013-F	Anchor Chain Retainer	2

Additional Hardware required for modular attachment to an additional DOCK-2Go Section Part# 85-205-F

	99-011-F	Female “T” Connector	2
	99-012-F	Male “T” Connector	2
	96-111-F	Connector Pin	2
	93-122-F	Backer Plate	4

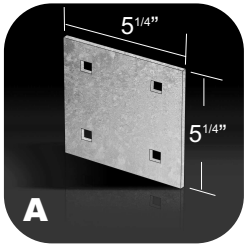

93-122-F Backer Plate. Used to sandwich wood framing when another piece of hardware isn’t used. Prevents bolt loosening and pull-through.

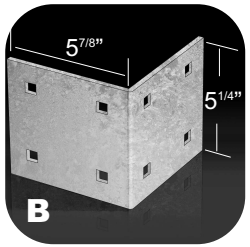

92-104-F Inside Corner. For lighter duty applications where an outside corner is not necessary.

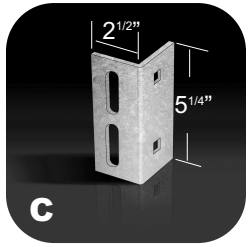

99-002-F Joist Corner. Use to mount stringers with 99-006-F washer plates. Also use as a backer plate to prevent cleats from pulling out.

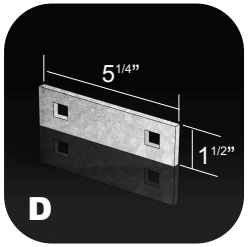

99-006-F Washer Plate.

99-013-F Chain Retainer. Holds chain up to 1/2” to secure the dock in position.

IMPORTANT: DockEdge+ Inc. assumes no responsibility or liability for the accuracy or representation of the graphic illustrations shown in this hardware guide. These graphic illustrations are not intended to be architectural drawings, and are not to be substituted for engineered drawings. Each is intended as a guideline ONLY. DockEdge+ Inc. does not warrant the quantities and/ or bill of materials to be accurate in all uses and applications. Individual dock structures may vary by necessity, preference or design. It may be necessary to vary the amount of materials listed in this guide depending on dock size, material usage, necessity and/ or the severity of the conditions to which the dock structure is subjected to.

All graphic illustrations are based on the use of conventional framework of 2” x 6” lumber and decking lumber. Freeboard may be adjusted by using 2”x8” or 2”x10” lumber. Substitutions in lumber and hardware placement may effect floatation.

DOCK EDGE 4E INC.®

35 Armthorpe Rd., Brampton, ON, Canada, L6T 5M4

800-295-3625 www.dockedge.com

Typical Joint Configuration

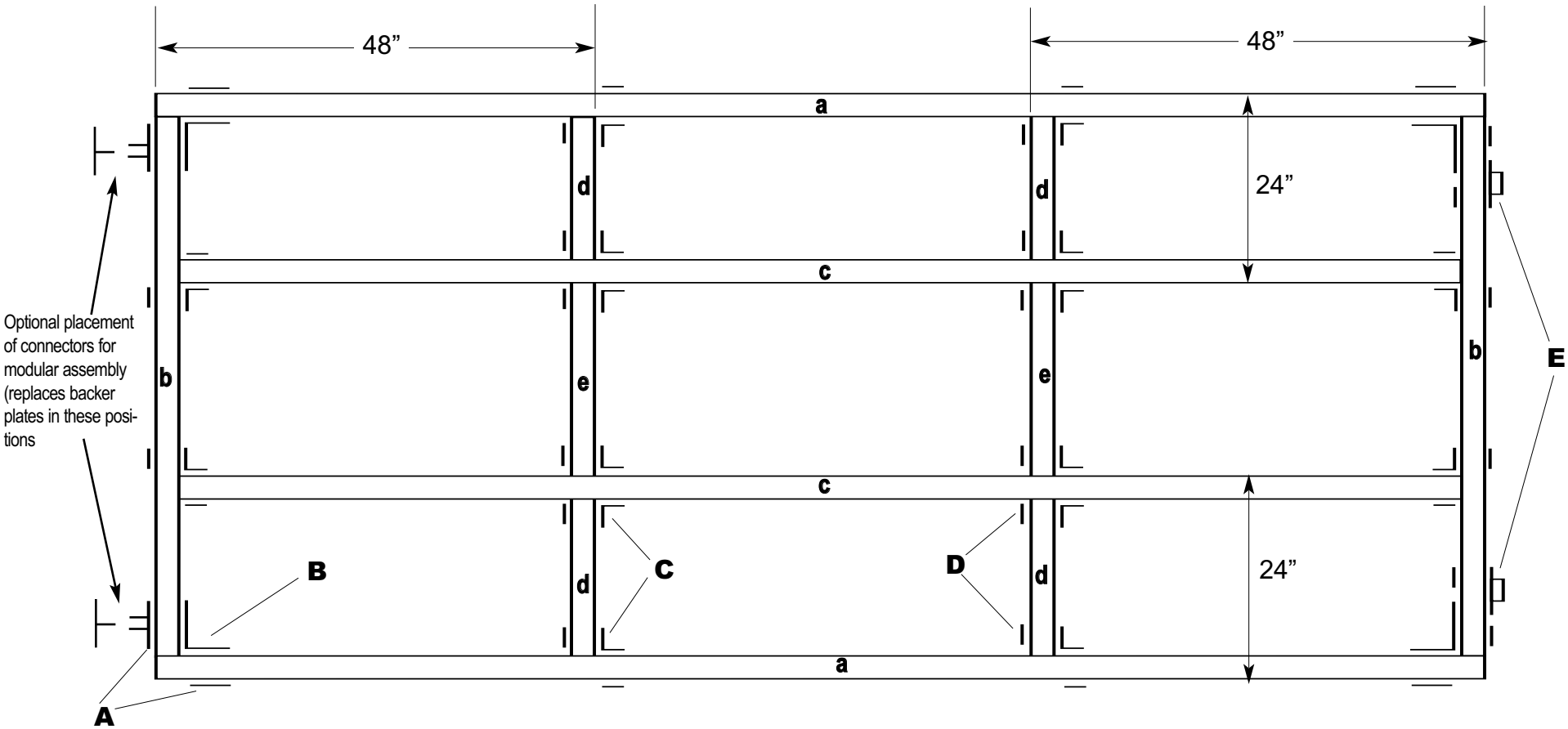

DOCK HARDWARE INCLUDED

REF	Part#	Description	QTY
A	93-122-F	Backer Plate	6
B	92-104-F	Inside Corner	4
C	99-002-F	Joist Corner	16
D	99-006-F	Washer Plate	28
E	99-013-F	Anchor Chain Retainer	2

Additional Hardware required for modular attachment to an additional DOCK-2Go Section

99-011-F	Female “T” Connector	2	Part# 85-205-F
99-012-F	Male “T” Connector	2	
96-111-F	Connector Pin	2	
93-122-F	Backer Plate	4	

TOOLS REQUIRED

Hammer
Drill
5/8” Drill Bit
Socket and wrench Set

LUMBER REQUIRED

REF	Description	QTY
a	2” x 6” x 12’ Outside Stringers	2
b	2” x 6” x 69” Ends Stringers	2
c	2” x 6” x 141” Short Cross Stringers	2
d	2” x 6” x 21” Inside Blocker	4
e	2” x 6” x 24” Inside Blocker	2
f	2” x 6” x 6’ Deck Boards	24